HydroTap Arc Plus BC Tap

Product Spec Sheet

HydroTap Arc Plus Boiling/Chilled (BC) Tap

Elevate your home hydration with the HydroTap Arc Plus BC Tap and enjoy instant access to filtered boiling and chilled water from the tap.

The HydroTap Arc Plus is timeless and enduringly classic tap style. With its curved 'swan neck', it will complement any kitchen or wet bar design – from traditional to contemporary.

This tap style can be installed over the sink as a secondary tap or over our optional design range font/drip tray. The HydroTap Arc Plus tap is available in six different finishes from a classic chrome to a modern gunmetal.

HydroTap Arc Plus BC Tap - Available Finishes

Chrome

Brushed Chrome

Matte Black

Brushed Gold

Brushed Nickel

Gunmetal

Product Order Codes for HydroTap Arc Plus BC Taps

HydroTap Arc Plus BC Tap in Chrome	01046206
HydroTap Arc Plus BC Tap in Brushed Chrome	01046207
HydroTap Arc Plus BC Tap in Matte Black	01046208
HydroTap Arc Plus BC Tap in Brushed Gold	01046209
HydroTap Arc Plus BC Tap in Brushed Nickel	01046210
HydroTap Arc Plus BC Tap in Gunmetal	01046211

Please see individual product spec sheets for command center and accessory product specs and order codes.

HydroTap Arc Plus BC Tap

Product Spec Sheet

Installation Requirements

The HydroTap is a pump-driven system so the installation of the Tap must be within 3' (0.9m) of the base command center. Installation on most countertops is straightforward however, some stone countertops may require a specialized cutting service.

If using a drip tray (font) accessory, suitable drainage to a trapped waste is required within 3' (0.9m) of the installation. Sufficient space and clearance to install the HydroTap as detailed in the product installation guidelines is required.

Installation and connection of your HydroTap must be carried out by a qualified person, observing all local, state, & federal regulations.

HydroTap Arc Plus BC - Tap Specs

Style:	HydroTap Arc Plus Tap (BC) - includes boiling water safety lock
Hole Size:	1 - 3/8" / 35mm
Tap Height:	15.2" / 387mm
Handle Orientaton:	Left side - fixed
Installation:	The tap is showcased at its finest when paired with the optional Design Range Drip Tray / Drain Font. It can be also be installed as an accessory tap over an existing sink.
Flow Rate:	Max 1.8 gpm / 6.81 lpm
Product Certifications:	IAPMO - NSF/ANSI 372, 42, 53, CSA B438.1, ASSE 1023, ASSE 1087; cUL; CEC; AB-100
ADA Compliant:	Yes

Arc Plus - Front View

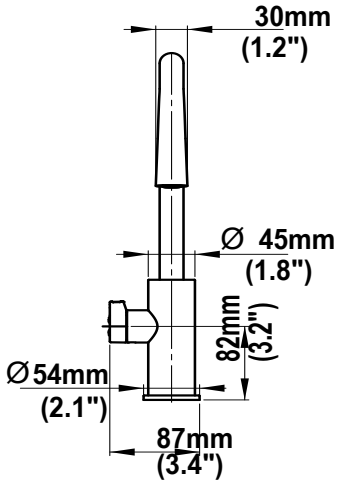

Arc Plus - Side View

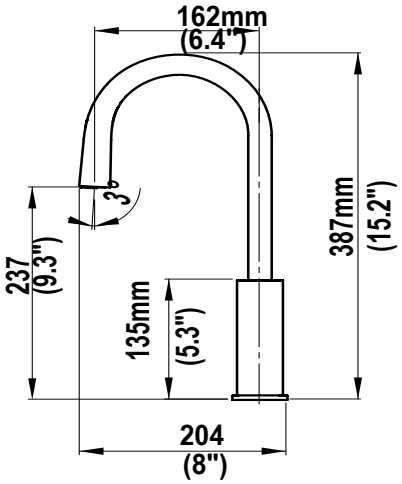

Arc Plus on Optional Standalone Font

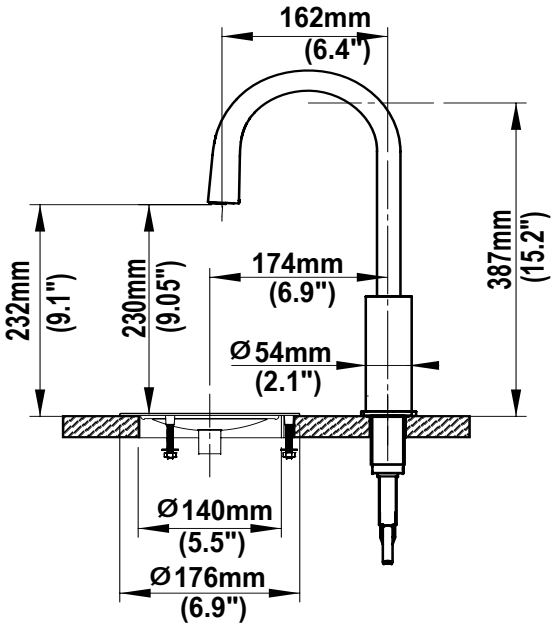

HydroTap 120V BC G5 Command Center

Product Spec Sheet

HydroTap 120V BC G5 Command Center

Product Order Code: 01043465

The HydroTap by Zip Water is more than just a water system, it's cooking made easy and it's water at its best. That's because the HydroTap 120V BC command center provides users instant access to filtered boiling and chilled water.

This command center is ideal for residential and small commercial applications and can be paired with any of our various tap styles.

HydroTap 120V BC G5 Command Center - Product Specs

Product Order Code	01043465
Application:	For home or small office (up to 10 users)
Water Pressure:	Min 37psi – Max 100psi (2.60 - 7.03kg/cm^2) with a minimum flow rate of 1 gpm (3.79 lpm)
Water Connection:	½" BSP - isolation valve is required within 3' (0.9m) of the installation
Integral Water Values:	All HydroTap systems are fitted with a Dual Check Valve and a 50psi (3.52kg/cm^2) Pressure Limiting Valve
Water Supply Requirements:	Potable drinking water supply
Optimal Total Dissolved Solids (TDS) Range:	TDS Min 50ppm – Max 150ppm
Integral Water Filter:	0.2 micron, 1 size - replace every 1,100 gallons / 4,163 liters or 12 months
Power Rating:	110-120V, 50-60Hz, 15 amp power supply with a NEMA 5-15 outlet
Dimensions (WxDxH):	13.3" x 18.2" x 13.1" / 339mm x 462mm x 333mm
Minimum Air Gap:	Minimum of 2" / 50mm clearance on left and right side and 8" / 200mm above
Minimum Cabinet Size:	18" wide x 24" deep / 457mm wide x 610mm deep
Maximum Hose Connection Length	3' / 0.9m (tap to command center)
Minimum Distance Needed for Installation	15" / 381mm (interior wall to garbage disposal)
Dry Weight:	66lbs / 30kg
Product Approvals:	IAPMO - NSF/ANSI 372, 42, 53, CSA B483.1, ASSE 1023, ASSE 1087; cUL; CEC
Warranty:	3 years

HydroTap 120V BC G5 Command Center

Product Spec Sheet

Installation Requirements

Installation and connection of your HydroTap must be carried out by a qualified person, observing all local, state, & federal regulations. You will require suitable 110 -120V 50-60Hz, 15 amp power supply with a NEMA 5-15 electrical outlet within 5' 9" (1.75m) of the product.

The HydroTap is a pump-driven system so the installation of the Tap must be within 3' (0.9m) of the base command center. The HydroTap is an air-cooled system so discrete cabinetry cut-outs are required for ventilation. Installation on most countertops is straightforward however, some stone countertops may require a specialized cutting service.

If using a drip tray (font) accessory, suitable drainage to a trapped waste is required within 3' (0.9m) of the installation. If you live in an area with hard water (more than 150ppm), we recommend installation of a scale filtration kit or a water softener. Sufficient space and clearance to install the HydroTap as detailed in the product installation guidelines is required.

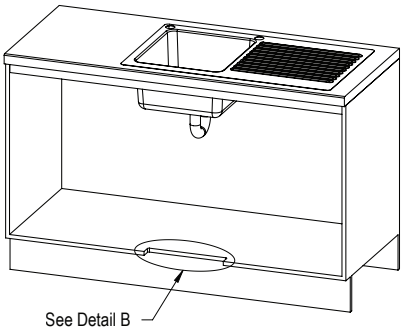

VENTILATION DETAIL

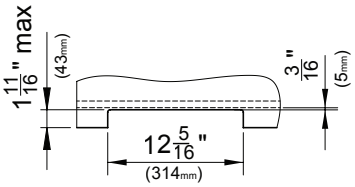

DETAIL B: CABINET FLOOR CUT-OUT

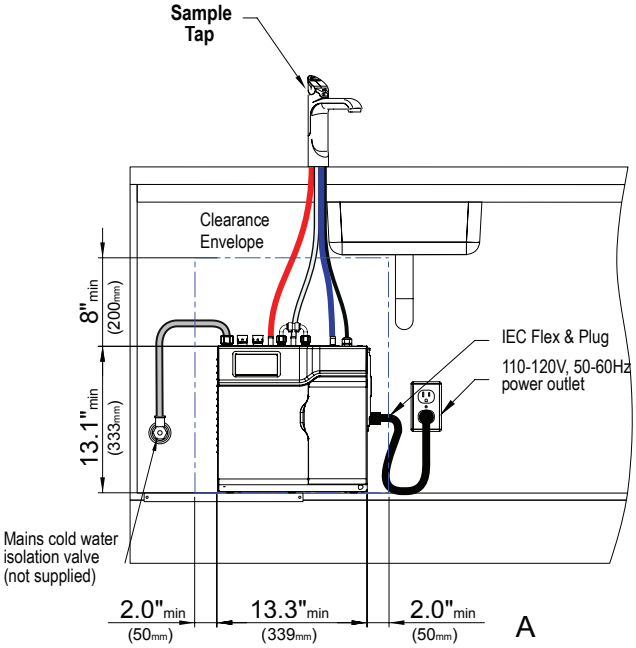

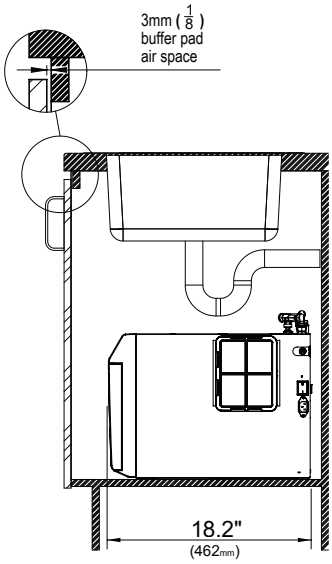

Scan QR code to view installation guide.