HydroTap Cube Plus BC Tap

Product Spec Sheet

HydroTap Cube Plus Boiling/Chilled (BC) Tap

Elevate your home hydration with the HydroTap Cube Plus BC Tap and enjoy instant access to filtered boiling and chilled and sparkling water from the tap.

The HydroTap Cube Plus offers a contemporary twist on a classic with its angular square shape which is softened by its rounded corners.

This tap style can be installed over the sink as a secondary tap or over our optional design range font/drip tray. The HydroTap Cube Plus tap is available in six different finishes from a classic chrome to a modern gunmetal.

HydroTap Cube Plus BC Tap - Available Finishes

Chrome

Brushed Chrome

Matte Black

Brushed Gold

Brushed Nickel

Gunmetal

Product Order Codes for HydroTap Cube Plus BC Taps

HydroTap Cube Plus BC Tap in Chrome	01046224
HydroTap Cube Plus BC Tap in Brushed Chrome	01046225
HydroTap Cube Plus BC Tap in Matte Black	01046226
HydroTap Cube Plus BC Tap in Brushed Gold	01046227
HydroTap Cube Plus BC Tap in Brushed Nickel	01046228
HydroTap Cube Plus BC Tap in Gunmetal	01046229

Please see individual product spec sheets for command center and accessory product specs and order codes.

HydroTap Cube Plus BC Tap

Product Spec Sheet

Installation Requirements

The HydroTap is a pump-driven system so the installation of the Tap must be within 3' (0.9m) of the base command center. Installation on most countertops is straightforward however, some stone countertops may require a specialized cutting service.

If using a drip tray (font) accessory, suitable drainage to a trapped waste is required within 3' (0.9m) of the installation. Sufficient space and clearance to install the HydroTap as detailed in the product installation guidelines is required.

Installation and connection of your HydroTap must be carried out by a qualified person, observing all local, state, & federal regulations.

HydroTap Cube Plus BC - Tap Specs

Style:	HydroTap Cube Plus Tap (BC) - includes boiling water safety lock
Tap Height:	13.7" (349mm) fixed height from counter to apex of spout
Installation:	Over sink as a secondary tap or on optional font/drip tray; Handle orientation - left side
Flow Rate:	Max 1.8 gpm / 6.8 lpm
Product Certifications:	IAPMO - NSF/ANSI 372, 42, 53, CSA B4438.1, ASSE 1023, ASSE 1087; cUL; CEC
ADA Compliant:	Yes

Cube Plus - Front View

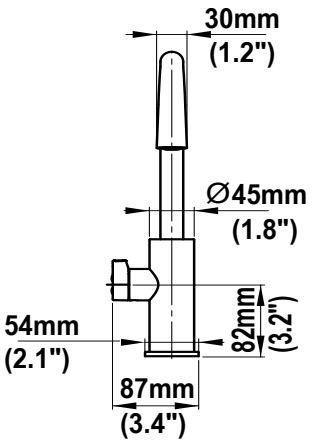

Cube Plus - Side View

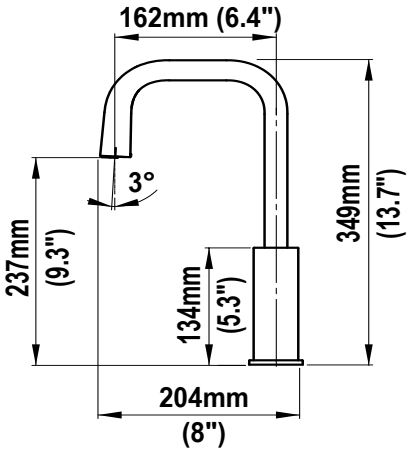
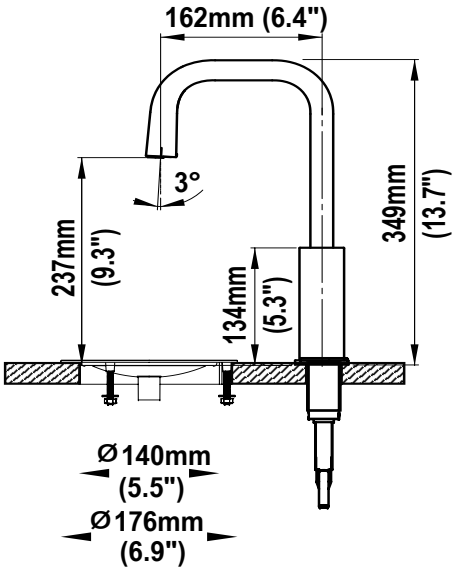
Cube Plus on Optional Standalone Font