HydroTap Cube Plus BCS Tap

Product Spec Sheet

HydroTap Cube Plus Boiling/Chilled/Sparkling (BCS) Tap

The HydroTap by Zip Water is not a faucet. With instant access to filtered boiling, chilled and sparkling water, it's cooking made easy, it's wellness at your fingertips, it's water at its best, and it'll be the most used appliance in your kitchen.

Enjoy the benefits of the Hydrotap system wrapped in the sleek design of the HydroTap Cube Plus tap style. he HydroTap Cube Plus offers a contemporary twist on a classic with its angular square shape which is softened by its rounded corners.

This tap style can be installed over the sink as a secondary tap or over our optional design range font/drip tray. The HydroTap Cube Plus tap is available in six different finishes from a classic chrome to a modern gunmetal.

HydroTap Cube Plus BCS Tap - Available Finishes

Chrome

Brushed Chrome

Matte Black

Brushed Gold

Brushed Nickel

Gunmetal

Product Order Codes for HydroTap Cube Plus BCS Taps

HydroTap Cube Plus BCS Tap in Chrome	01046218
HydroTap Cube Plus BCS Tap in Brushed Chrome	01046219
HydroTap Cube Plus BCS Tap in Matte Black	01046220
HydroTap Cube Plus BCS Tap in Brushed Gold	01046221
HydroTap Cube Plus BCS Tap in Brushed Nickel	01046222
HydroTap Cube Plus BCS Tap in Gunmetal	01046223

Please see individual product spec sheets for command center and accessory product specs and order codes.

HydroTap Cube Plus BCS Tap

Product Spec Sheet

Installation Requirements

The HydroTap is a pump-driven system so the installation of the Tap must be within 3' (0.9m) of the base command center. Installation on most countertops is straightforward however, some stone countertops may require a specialized cutting service.

If using a drip tray (font) accessory, suitable drainage to a trapped waste is required within 3' (0.9m) of the installation. Sufficient space and clearance to install the HydroTap as detailed in the product installation guidelines is required.

Installation and connection of your HydroTap must be carried out by a qualified person, observing all local, state, & federal regulations.

HydroTap Cube Plus BCS - Tap Specs

Style:	HydroTap Cube Plus Tap (BCS) - includes boiling water safety lock
Hole Size:	1 - 3/8" / 35mm
Tap Height:	13.7" (349mm) fixed height from counter to apex of spout
Installation:	Over sink as a secondary tap or on optional font/drip tray; Handle orientation - left side
Flow Rate:	Max 1.8 gpm / 6.8 lpm
Sparkling Water Flow Rate	0.4 gpm / 1.51 lpm
Product Certifications:	IAPMO - NSF/ANSI 372, 42, 53, CSA B4438.1, ASSE 1087; cUL; CEC
ADA Compliant:	Yes

Cube Plus - Front View

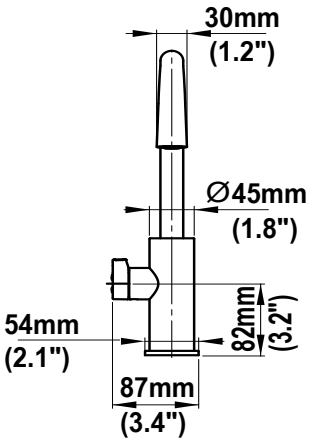

Cube Plus - Side View

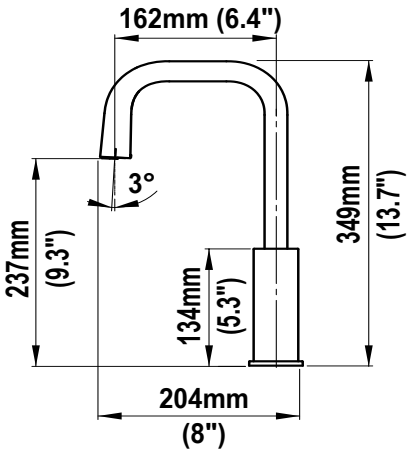
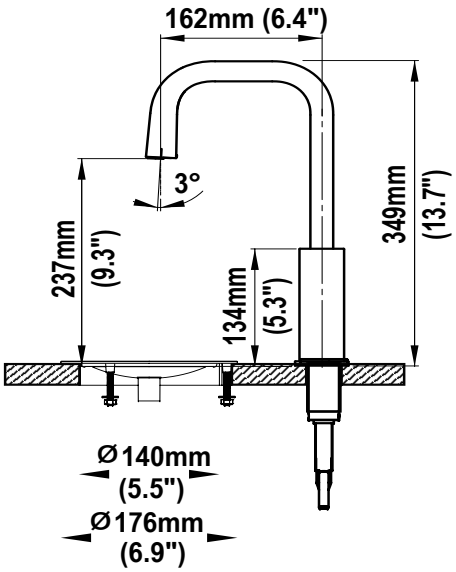
Cube Plus on Optional Standalone Font