HydroTap Cube Plus CS Tap

Product Spec Sheet

HydroTap Cube Plus Chilled/Sparkling (CS) Tap

Elevate your home hydration with the HydroTap Cube Plus CS Tap and enjoy instant access to filtered chilled and sparkling water from the tap.

The HydroTap Cube Plus offers a contemporary twist on a classic with its angular square shape which is softened by its rounded corners.

This tap style can be installed over the sink as a secondary tap or over our optional design range font/drip tray. The HydroTap Cube Plus tap is available in six different finishes from a classic chrome to a modern gunmetal.

HydroTap Cube Plus CS Tap - Available Finishes

Chrome

Brushed Chrome

Matte Black

Brushed Gold

Brushed Nickel

Gunmetal

Product Order Codes for HydroTap Cube Plus CS Taps

HydroTap Cube Plus CS Tap in Chrome	01046230
HydroTap Cube Plus CS Tap in Brushed Chrome	01046231
HydroTap Cube Plus CS Tap in Matte Black	01046232
HydroTap Cube Plus CS Tap in Brushed Gold	01046233
HydroTap Cube Plus CS Tap in Brushed Nickel	01046234
HydroTap Cube Plus CS Tap in Gunmetal	01046235

Please see individual product spec sheets for command center and accessory product specs and order codes.

HydroTap Cube Plus CS Tap

Product Spec Sheet

Installation Requirements

The HydroTap is a pump-driven system so the installation of the Tap must be within 3' (0.9m) of the base command center. Installation on most countertops is straightforward however, some stone countertops may require a specialized cutting service.

If using a drip tray (font) accessory, suitable drainage to a trapped waste is required within 3' (0.9m) of the installation. Sufficient space and clearance to install the HydroTap as detailed in the product installation guidelines is required.

Installation and connection of your HydroTap must be carried out by a qualified person, observing all local, state, & federal regulations.

HydroTap Cube Plus CS - Tap Specs

Style:	HydroTap Cube Plus Tap (CS)
Hole Size:	1 - 3/8" / 35mm
Tap Height:	13.7" (349mm) fixed height from counter to apex of spout
Installation:	Over sink as a secondary tap or on optional font/drip tray; Handle orientation - left side
Flow Rate:	Max 1.8 gpm / 6.8 lpm
Sparkling Water Flow Rate	0.4 gpm / 1.51 lpm
Product Certifications:	IAPMO - NSF/ANSI 372, 42, 53, CSA B4438.1, ASSE 1087; cUL; CEC
ADA Compliant:	Yes

Cube Plus - Front View

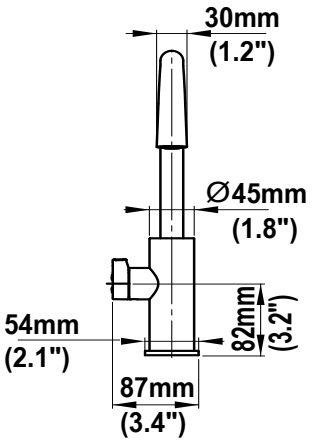

Cube Plus - Side View

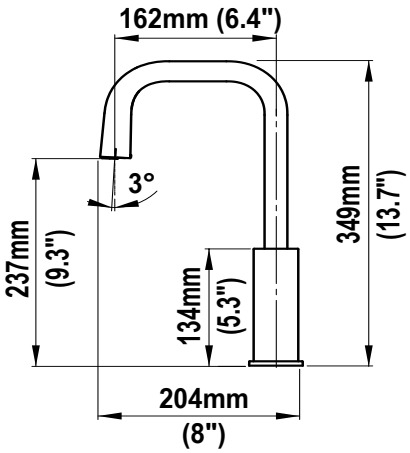
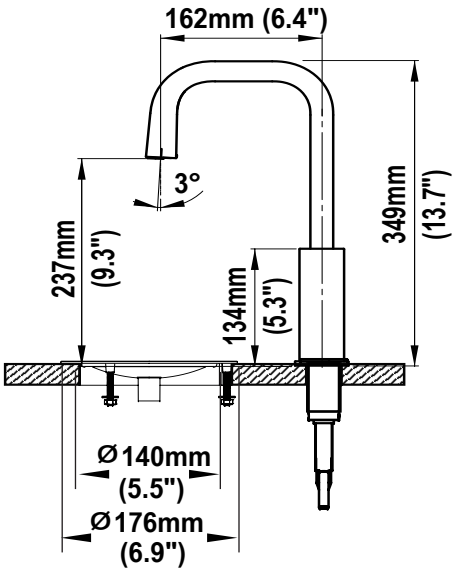
Cube Plus on Optional Standalone Font