HydroTap Arc Plus CS Tap

Product Spec Sheet

HydroTap Arc Plus Chilled/Sparkling (CS) Tap

Elevate your home hydration with the HydroTap Arc Plus CS Tap and enjoy instant access to filtered chilled and sparkling water from the tap.

The HydroTap Arc Plus is timeless and enduringly classic tap style. With its curved 'swan neck', it will complement any kitchen or wet bar design – from traditional to contemporary.

This tap style can be installed over the sink as a secondary tap or over our optional design range font/drip tray. The HydroTap Arc Plus tap is available in six different finishes from a classic chrome to a modern gunmetal.

HydroTap Arc Plus CS Tap - Available Finishes

Chrome

Brushed Chrome

Matte Black

Brushed Gold

Brushed Nickel

Gunmetal

Product Order Codes for HydroTap Arc Plus CS Taps

HydroTap Arc Plus CS Tap in Chrome	01046212
HydroTap Arc Plus CS Tap in Brushed Chrome	01046213
HydroTap Arc Plus CS Tap in Matte Black	01046214
HydroTap Arc Plus CS Tap in Brushed Gold	01046215
HydroTap Arc Plus CS Tap in Brushed Nickel	01046216
HydroTap Arc Plus CS Tap in Gunmetal	01046217

Please see individual product spec sheets for command center and accessory product specs and order codes.

HydroTap Arc Plus CS Tap

Product Spec Sheet

Installation Requirements

The HydroTap is a pump-driven system so the installation of the Tap must be within 3' (0.9m) of the base command center. Installation on most countertops is straightforward however, some stone countertops may require a specialized cutting service.

If using a drip tray (font) accessory, suitable drainage to a trapped waste is required within 3' (0.9m) of the installation. Sufficient space and clearance to install the HydroTap as detailed in the product installation guidelines is required.

Installation and connection of your HydroTap must be carried out by a qualified person, observing all local, state, & federal regulations.

HydroTap Arc Plus CS - Tap Specs

Style:	HydroTap Arc Plus Tap (CS)
Hole Size:	1 - 3/8" / 35mm
Tap Height:	15.2" / 387mm
Installation:	Over sink as a secondary tap or on optional font/drip tray; Handle orientation - left side
Flow Rate:	Max 1.8 gpm / 6.81 lpm
Sparkling Water Flow Rate	0.4 gpm / 1.51 lpm
Product Certifications:	IAPMO - NSF/ANSI 372, 42, 53, CSA B438.1, ASSE 1023, ASSE 1087; cUL; CEC
ADA Compliant:	Yes

Arc Plus - Front View

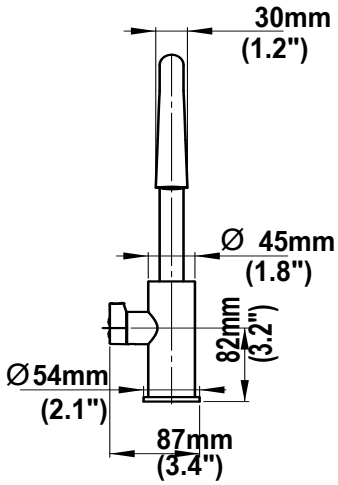

Arc Plus - Side View

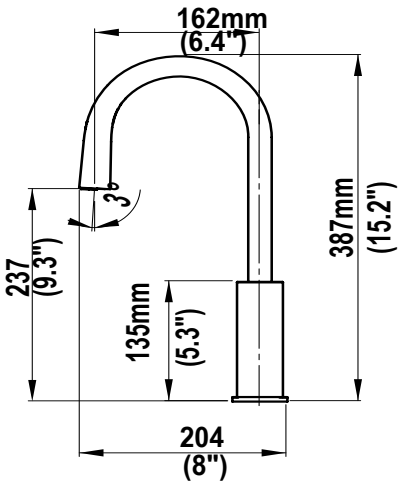
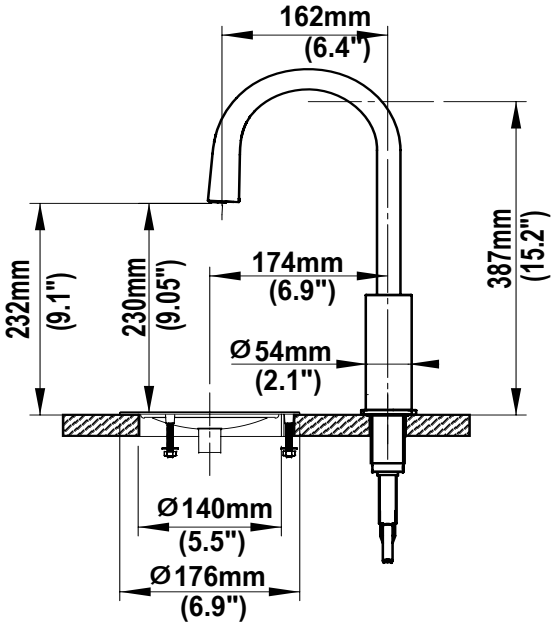
Arc Plus on Optional Standalone Font